SECTION SC
STARTING & CHARGING SYSTEM

CONTENTS

SERVICE INFORMATION

PRECAUTIONS

Precaution for Supplemental Restraint System (SRS) "AIR BAG" and "SEAT BELT PRE-TENSIONER"

INFOID:0000000001721039

The Supplemental Restraint System such as “AIR BAG” and “SEAT BELT PRE-TENSIONER”, used along with a front seat belt, helps to reduce the risk or severity of injury to the driver and front passenger for certain types of collision. This system includes seat belt switch inputs and dual stage front air bag modules. The SRS system uses the seat belt switches to determine the front air bag deployment, and may only deploy one front air bag, depending on the severity of a collision and whether the front occupants are belted or unbelted.
Information necessary to service the system safely is included in the SRS and SB section of this Service Manual.

WARNING:

- **To avoid rendering the SRS inoperative, which could increase the risk of personal injury or death in the event of a collision which would result in air bag inflation, all maintenance must be performed by an authorized NISSAN/INFINITI dealer.**
- **Improper maintenance, including incorrect removal and installation of the SRS, can lead to personal injury caused by unintentional activation of the system. For removal of Spiral Cable and Air Bag Module, see the SRS section.**
- **Do not use electrical test equipment on any circuit related to the SRS unless instructed to in this Service Manual. SRS wiring harnesses can be identified by yellow and/or orange harnesses or harness connectors.**

PREPARATION

Special Service Tool

INFOID:0000000001721040

Tool number (Kent-Moore No.) Tool name	Description
— (J-44373) Model 620 Starting/Charging system tester 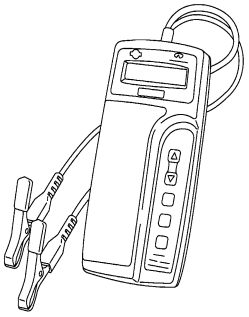 SEL403X	Tests starting and charging systems. For operating instructions, refer to Technical Service Bulletin.
— (J-48087) Battery Service Center 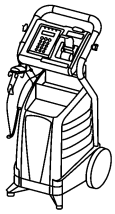 WKIA5280E	Tests and charges batteries. For operating instructions, refer to Technical Service Bulletin and Battery Service Center User Guide.

Commercial Service Tool

INFOID:0000000001721041

Tool number Tool name	Description
Power tool 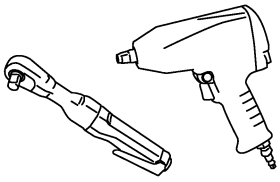 PBIC0190E	Loosening bolts and nuts

BATTERY

How to Handle Battery

INFOID:0000000001721042

CAUTION:
- **If it becomes necessary to start the engine with a booster battery and jumper cables, use a 12-volt booster battery.**
- **After connecting battery cables, ensure that they are tightly clamped to battery terminals for good contact.**
- **Never add distilled water through the hole used to check specific gravity.**

METHODS OF PREVENTING OVER-DISCHARGE

The following precautions must be taken to prevent over-discharging a battery.
- The battery surface (particularly its top) should always be kept clean and dry.
- The terminal connections should be clean and tight.
- At every routine maintenance, check the electrolyte level.
  This also applies to batteries designated as “low maintenance” and “maintenance-free”.

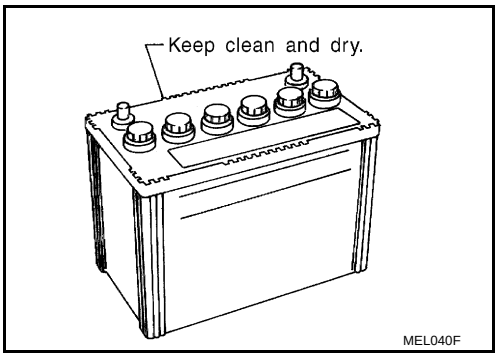

- When the vehicle is not going to be used over a long period of time, disconnect the negative battery terminal.

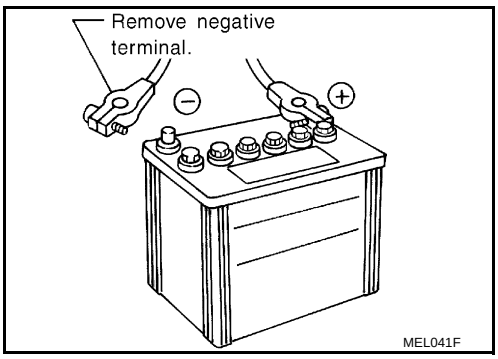

- Check the charge condition of the battery.
  Periodically check the specific gravity of the electrolyte. Keep a close check on charge condition to prevent over-discharge.

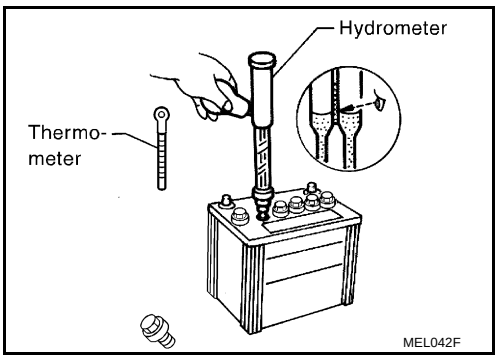

CHECKING ELECTROLYTE LEVEL

WARNING:
Do not allow battery fluid to come in contact with skin, eyes, fabrics, or painted surfaces. After touching a battery, do not touch or rub your eyes until you have thoroughly washed your hands. If acid contacts eyes, skin or clothing, immediately flush with water for 15 minutes and seek medical attention.

- Remove the cell plug using a suitable tool.
- Add distilled water up to the MAX level.

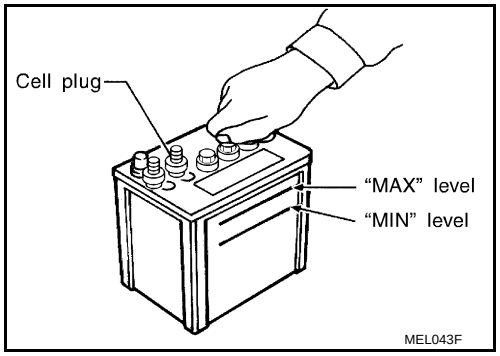

Sulfation

A battery will be completely discharged if it is left unattended for a long time and the specific gravity will become less than 1.100. This may result in sulphation on the cell plates.
To determine if a battery has been "sulfated", note its voltage and current when charging it. As shown in the figure, less current and higher voltage are observed in the initial stage of charging sulfated batteries.
A sulfated battery may sometimes be brought back into service by means of a long, slow charge, 12 hours or more, followed by a battery capacity test.

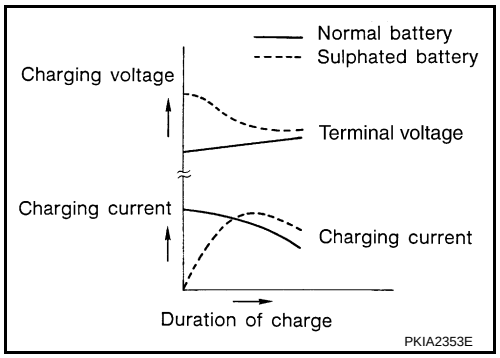

SPECIFIC GRAVITY CHECK

1. Read hydrometer and thermometer indications at eye level.
2. Use the following chart to correct your hydrometer reading according to electrolyte temperature.

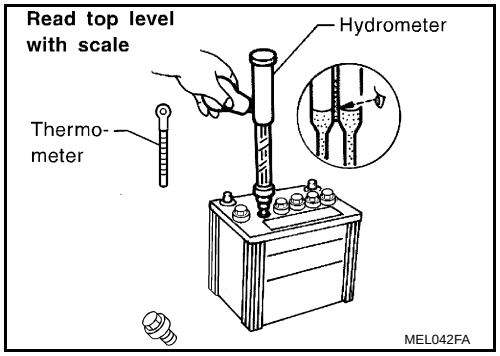

Hydrometer Temperature Correction

Battery electrolyte temperature °C (°F)	Add to specific gravity reading
71 (160)	0.032
66 (150)	0.028
60 (140)	0.024
54 (130)	0.020
49 (120)	0.016
43 (110)	0.012
38 (100)	0.008
32 (90)	0.004
27 (80)	0
21 (70)	–0.004
16 (60)	–0.008
10 (50)	–0.012
4 (40)	–0.016
–1 (30)	–0.020

Battery electrolyte temperature °C (°F)	Add to specific gravity reading
–7 (20)	–0.024
–12 (10)	–0.028
–18 (0)	–0.032

Corrected specific gravity	Approximate charge condition
1.260 - 1.280	Fully charged
1.230 - 1.250	3/4 charged
1.200 - 1.220	1/2 charged
1.170 - 1.190	1/4 charged
1.140 - 1.160	Almost discharged
1.110 - 1.130	Completely discharged

CHARGING THE BATTERY

CAUTION:

- **Do not “quick charge” a fully discharged battery.**
- **Keep the battery away from open flame while it is being charged.**
- **When connecting the charger, connect the leads first, then turn on the charger. Do not turn on the charger first, as this may cause a spark.**
- **If battery electrolyte temperature rises above 60°C (140°F), stop charging. Always charge battery at a temperature below 60°C (140°F).**

Charging Rates

Amps	Time
50	1 hour
25	2 hours
10	5 hours
5	10 hours

Do not charge at more than 50 ampere rate.

NOTE:

The ammeter reading on your battery charger will automatically decrease as the battery charges. This indicates that the voltage of the battery is increasing normally as the state of charge improves. The charging amps indicated above refer to initial charge rate.

- If, after charging, the specific gravity of any two cells varies more than.050, the battery should be replaced.

Trouble Diagnosis with Battery/Starting/Charging System Tester

INFOID:0000000001721043

CAUTION:

When working with batteries, always wear appropriate eye protection.

NOTE:

- To ensure a complete and thorough diagnosis, the battery, starter and generator test segments must be done as a set from start to finish.
- If battery surface charge is detected while testing, the tester will prompt you to turn on the headlights to remove the surface charge.
- If necessary, the tester will prompt you to determine if the battery temperature is above or below 0°C (32°F). Choose the appropriate selection by pressing the up or down arrow button, then press “ENTER” to make the selection.

1. Turn off all loads on the vehicle electrical system. Clean or repair as necessary.
2. Visually inspect the battery, battery terminals and cable ends with ignition switch in “OFF” position.
   NOTE:
   The contact surface between the battery terminals, cable ends and tester leads must be clean for a valid test. A poor connection will prevent testing and a “CHECK CONNECTION” message will appear during the test procedures. If this occurs, clean the battery post and terminals, reconnect them and restart the test.

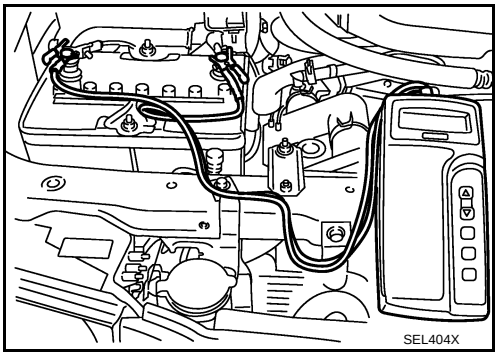

3. Connect the red tester lead clamp to the positive battery terminal, and the black to the negative terminal.
4. The tester will turn on automatically. Using the arrow keys, select “IN-VEHICLE” on the tester and then press the “ENTER” key.

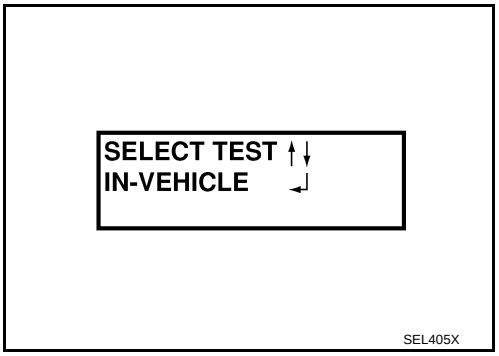

5. Locate the battery type and rating stamped or written on the top case of the battery to be tested.
   NOTE:
   The battery rating will be either of the following:
   - **CCA**: Cold Cranking Amps (490 CCA, 550 CCA, etc.)
   - **JIS**: Japanese Industrial Standard.

   When using the Battery Tester use the CCA rating only.
   - The tester requires the CCA rating for the battery be entered exactly as it is written or stamped on the battery.
   - (U.S. market) Refer to the latest "Battery Testing" Technical Service Bulletin (TSB) for a chart which contains these ratings listed by vehicle.
   - You must not use the JIS rating.

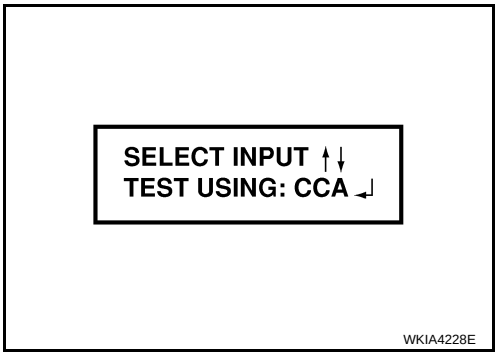

6. Using the arrow and “ENTER” keys alternately, select the battery type and rating.
   NOTE:
   The tester lists five choices; CCA, JIS, IEC, DIN, and EN. Only use CCA.
7. Press “ENTER” to begin the test. Diagnosis results are displayed on the tester. Refer to "DIAGNOSTIC RESULT ITEM CHART".

8. Press “ENTER”, then test output code is displayed. Record the test output code on the repair order.
9. Toggle back to the “DIAGNOSTIC SCREEN” for test results.
   NOTE:
   - If necessary, the tester will ask the user to determine if the battery has just been charged. Choose the appropriate selection by pressing the up or down arrow button and then press the “ENTER” button to make the selection.
   - When testing a battery installed in a vehicle that has recently been driven, select “BEFORE CHARGE”.
   - If the battery has just been slow charged due to a “CHARGE & RETEST” decision by the tester, and the tester asks the user “BEFORE CHARGE/AFTER CHARGE”, select “AFTER CHARGE”.

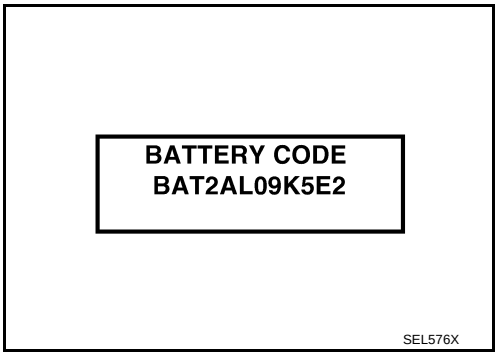

DIAGNOSTIC RESULT ITEM CHART

Diagnostic item	Service procedure
GOOD BATTERY	Battery is OK. Refer to "Trouble Diagnoses with Battery/Starting/Charging System Tester".
REPLACE BATTERY	Replace battery. Before replacing battery, clean the battery cable clamps and battery posts. Perform battery test again with Battery/Starting/Charging system tester. If second test result is “Replace Battery”, then do so. Perform battery test again to confirm repair.
BAD CELL-REPLACE	Replace the battery. Perform battery test again with Battery/Starting/Charging system tester to confirm repair.
GOOD-RECHARGE	Perform the slow battery charging procedure. (Initial rate of charge is 10A for 12 hours.) Perform battery test again with Battery/Starting/Charging system tester.
CHARGE & RETEST	Perform the slow battery charging. (Initial rate of charge is 10A for 12 hours.) Perform battery test again with Battery/Starting/Charging system tester to confirm repair. **NOTE:** **If the tester asks the user “BEFORE CHARGE/AFTER CHARGE”, select “AFTER CHARGE”.**

Removal and Installation

INFOID:0000000001721044

REMOVAL

1. Disconnect negative battery terminal and positive battery terminal.
   CAUTION:
   When removing, remove negative battery terminal first.
2. Remove battery frame mounting nuts and battery frame.
3. Remove battery cover.
4. Remove battery.

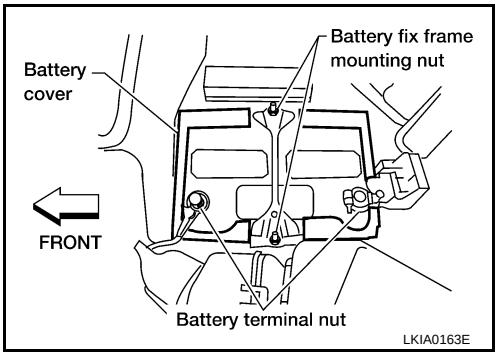

INSTALLATION

Installation is in the reverse order of removal.

CAUTION:

When installing, install positive battery terminal first.

Battery frame mounting nut	**: 4.45 N·m (0.45 kg-m, 39 in-lb)**
Battery terminal nut	**: 3.45 N·m (0.35 kg-m, 31 in-lb)**

Required Procedures After Battery Disconnection

INFOID:0000000003079166

SYSTEM	ITEM	Reference
Engine Control	Accelerator Pedal Released Position Learning	EC-75
	Throttle Valve Closed Position Learning	EC-75
	Idle Air Volume Learning	EC-75
Brake Control	Steering Angle Sensor Neutral Position	BRC-45
Roof	Sunroof Memory Reset/Initialization	RF-10
Seats	Automatic Drive Positioner System Initialization	Refer to the Owner's Manual.
Automatic Temperature Control	Temperature Setting Trimmer	ATC-34
	Foot Postition Setting Trimmer	
	Inlet Port Memory Function	
Audio-visual	Audio (Radio Preset)	Refer to the Owner's Manual.
	NAVI	Refer to the Navigation System Owner's Manual.

STARTING SYSTEM

System Description

INFOID:0000000001721045

Power is supplied at all times:
- through 40A fusible link (letter **m**, located in the fuse and fusible link box)
- to ignition switch terminal B.

With the ignition switch in the START position, power is supplied:
- from ignition switch terminal ST
- to IPDM E/R terminal 4.

With the ignition switch in the ON or START position and the selector lever in the P or N position, power is supplied:
- from terminal 24 of the transmission control module (TCM)
- to IPDM E/R terminal 53.

Provided that the IPDM E/R receives a starter relay on signal from the BCM over the CAN lines, the IPDM E/R is energized and power is supplied:
- from terminal 3 of the IPDM E/R
- to terminal S of the starter motor windings.

The starter motor plunger closes and provides a closed circuit between the battery and the starter motor. The starter motor is grounded to the cylinder block. With power and ground supplied, the starter motor operates.
In the event that the CAN communication line fails, the IPDM E/R will continue to receive a starter relay on signal from the BCM as long as the ignition switch remains in the START or ON positions.

Wiring Diagram - START -

INFOID:0000000001721046

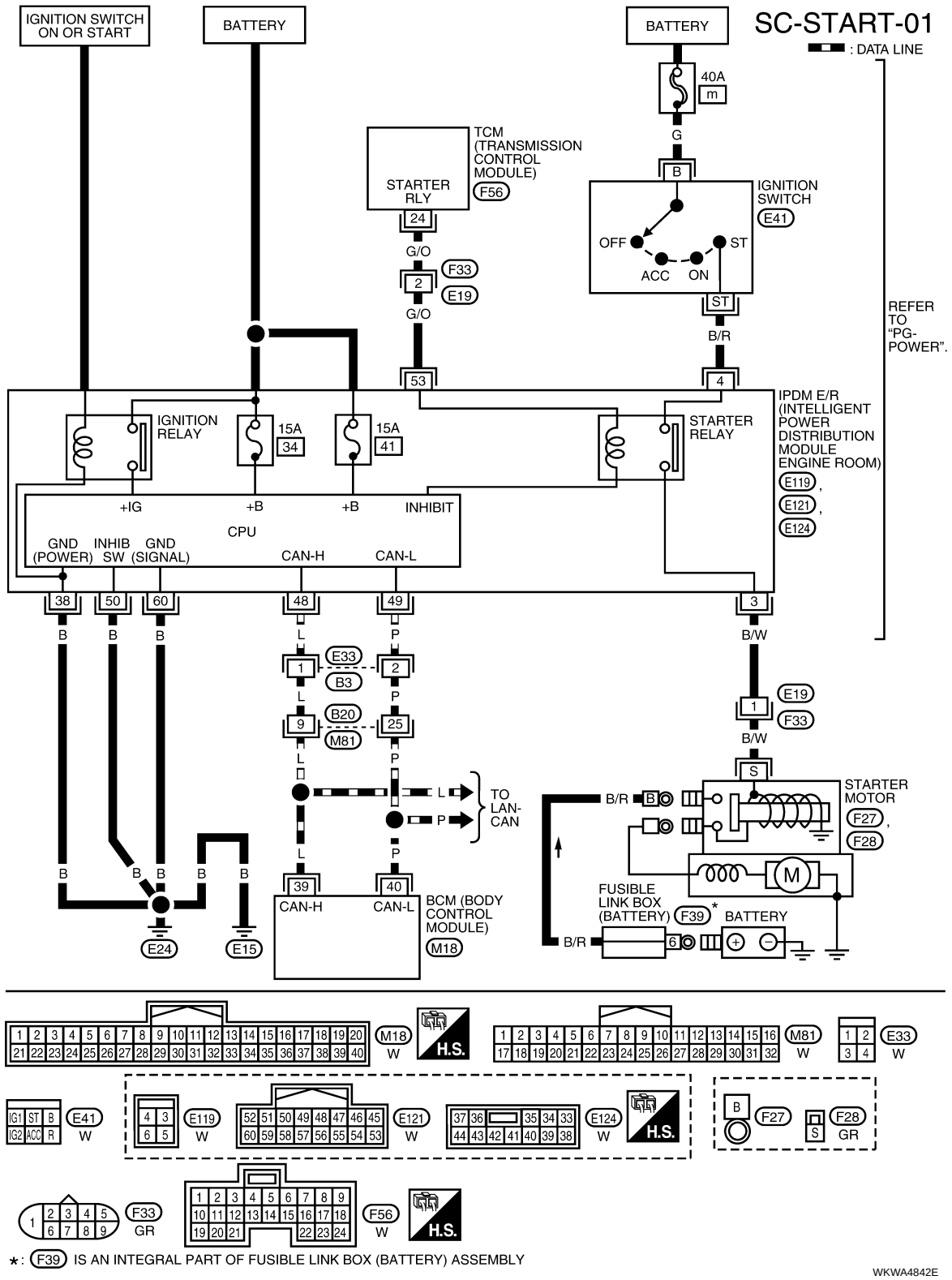

Trouble Diagnosis with Battery/Starting/Charging System Tester

INFOID:0000000001721047

NOTE:
To ensure a complete and thorough diagnosis, the battery, starter and generator test segments must be done as a set from start to finish.

1. Turn off all loads on the vehicle electrical system.
2. Perform battery test with Battery/Starting/Charging system tester. Refer to "Trouble Diagnoses with Battery/Starting/Charging System Tester".
3. Press “ENTER” to begin the starting system test.

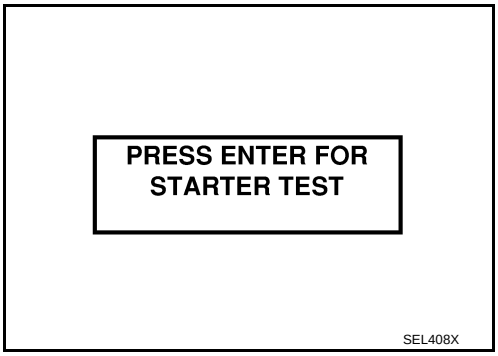

4. Start the engine.

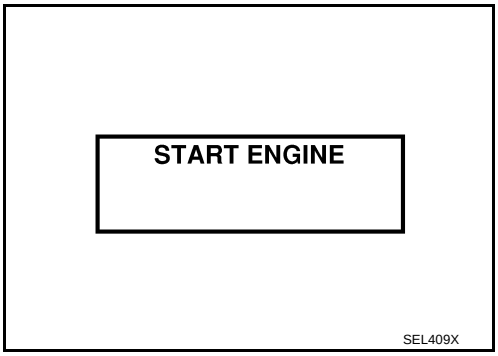

5. Diagnosis result is displayed on the tester. Refer to "DIAGNOSTIC RESULT ITEM CHART".
   NOTE:
   - If the starter performs normally but the engine does not start, perform engine diagnosis.
   - For intermittent “NO CRANK” or “NO STARTER OPERATION” incidents, refer to "DIAGNOSTIC PROCEDURE 2".

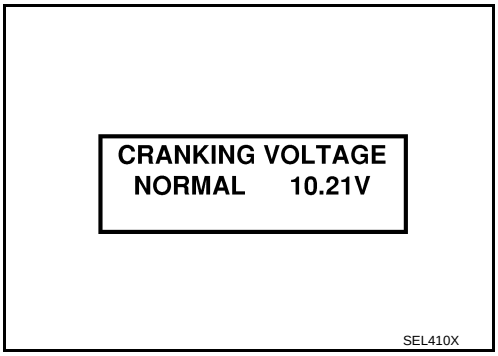

DIAGNOSTIC RESULT ITEM CHART

Diagnostic item	Service procedure
CRANKING VOLTAGE NORMAL	Go to “WORK FLOW”, "WORK FLOW".
CRANKING VOLTAGE LOW	
CHARGE BATTERY	Perform the slow battery charging procedure. (Initial rate of charge is 10A for 12 hours.) Perform battery test again with Battery/Starting/Charging system tester. Refer to "Trouble Diagnoses with Battery/Starting/Charging System Tester".
REPLACE BATTERY	Before replacing battery, clean the battery cable clamps and battery posts. Perform battery test again with Battery/Starting/Charging system tester. Refer to "Trouble Diagnoses with Battery/Starting/Charging System Tester". If second test result is “REPLACE BATTERY”, then do so. Perform battery test again to confirm repair.

WORK FLOW

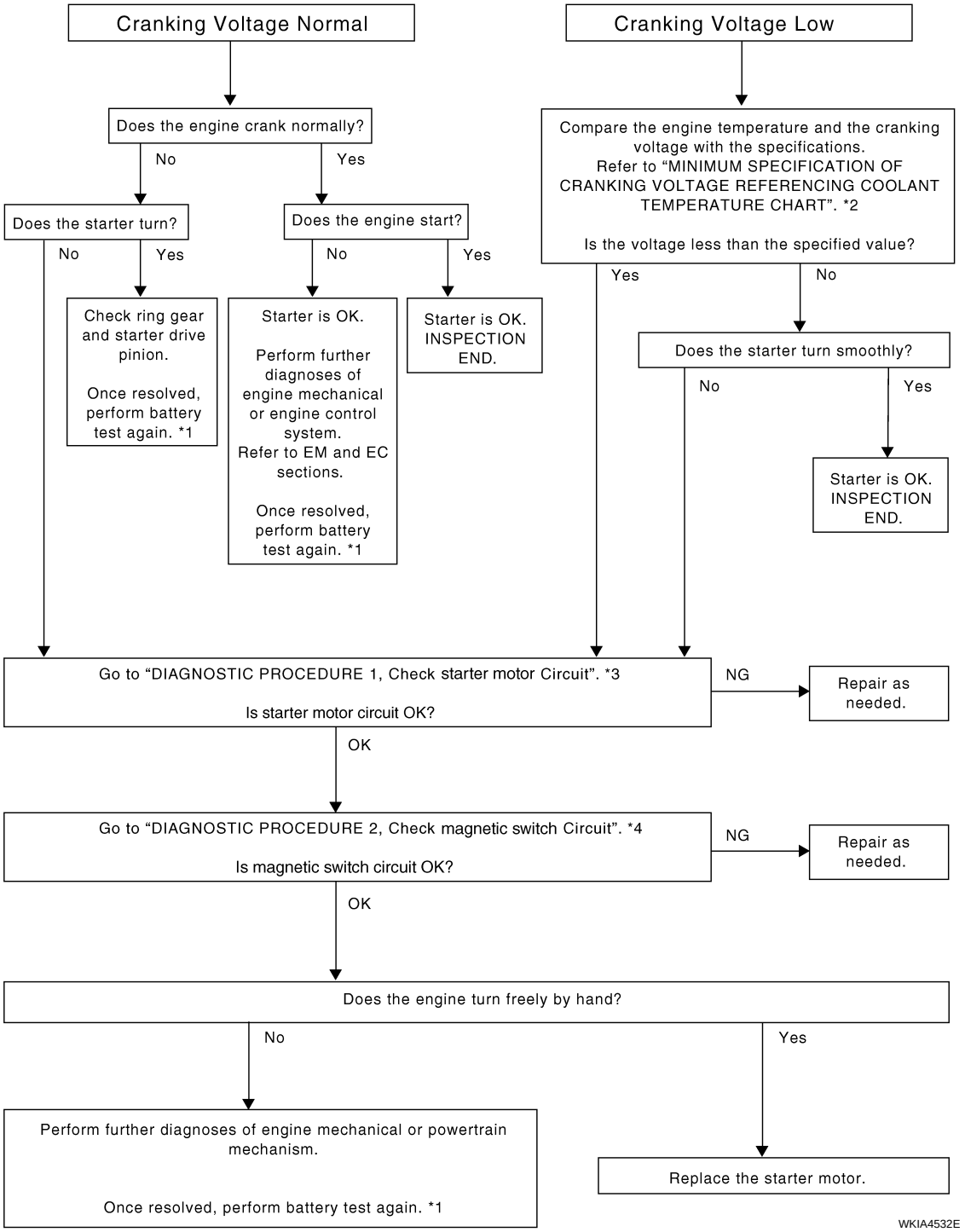

*1 "Trouble Diagnoses with Battery/ Starting/Charging System Tester"
*2 "Check Starter Motor Circuit"
*3 "DIAGNOSTIC PROCEDURE 2"
*4 "Check Magnetic Switch Circuit"

DIAGNOSTIC PROCEDURE 1

Check Starter Motor Circuit

1. CHECK POWER SUPPLY TO STARTER MOTOR

1. Remove the fuel pump fuse.
2. Crank or start the engine (where possible) until the fuel pressure is released.

3. Turn the ignition switch OFF.
4. Check that the starter motor connector F27 terminal B connection is clean and tight.
5. Check voltage between starter motor connector F27 terminal B and ground using a digital circuit tester.

Battery voltage should exist

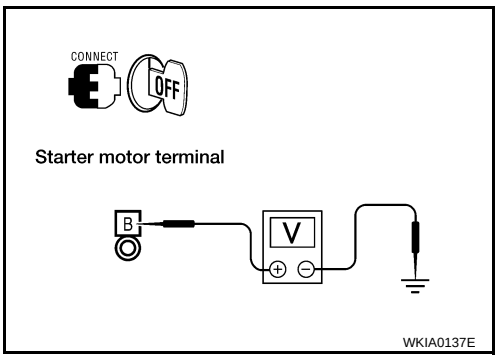

OK or NG

OK >> GO TO 2.
NG >> Check harness between the battery and the starter motor for open circuit.

2. CHECK VOLTAGE DROP ON STARTER MOTOR CIRCUIT

1. Check voltage between starter motor connector F27 terminal B and battery positive terminal using a digital circuit tester.

Ignition switch in START : Less than 0.5V

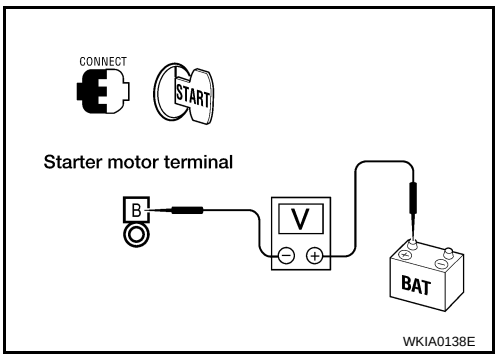

OK or NG

OK >> GO TO 3.
NG >> Check harness between the battery and the starter motor for poor continuity.

3. CHECK VOLTAGE DROP ON STARTER MOTOR GROUND CIRCUIT

1. Check voltage between starter motor case and battery negative terminal using a digital circuit tester.

Ignition switch in START : Less than 0.2V

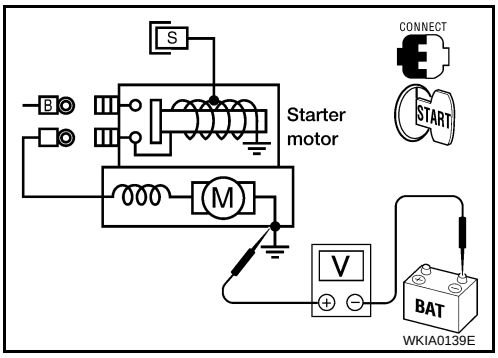

OK or NG

OK >> Starter motor ground circuit is OK. Further inspection is necessary. Refer to "WORK FLOW".
NG >> Check harness between the starter motor case and ground for poor continuity.

DIAGNOSTIC PROCEDURE 2

Check Magnetic Switch Circuit

1. CHECK POWER SUPPLY FOR MAGNETIC SWITCH

1. Remove the fuel pump fuse.
2. Crank or start the engine (where possible) until the fuel pressure is released.
3. Turn the ignition switch OFF.
4. Disconnect starter motor connector F28.

5. Check voltage between starter motor connector F28 terminal S and ground using a digital circuit tester.

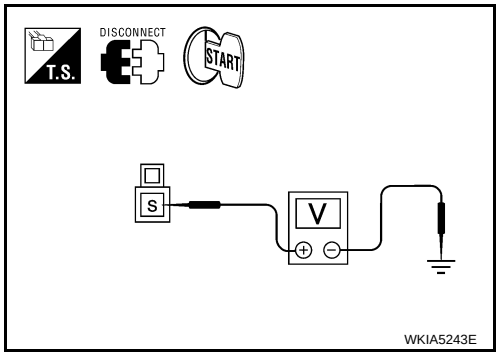

Ignition switch in START **: Battery voltage**

OK or NG

OK >> GO TO 2.

NG >> Check the following:
- 40A fusible link (letter **m** , located in fuse and fusible link box)
- 15A fuses [Nos. 34 and 41, located in the intelligent power distribution module engine room (IPDM E/R)]
- Ignition switch
- Starter relay [within the intelligent power distribution module engine room (IPDM E/R)]
- Starter relay request ON signal
- Harness for open or short

2. CHECK VOLTAGE DROP ON MAGNETIC SWITCH CIRCUIT

1. Connect starter motor connector F28.
2. Check voltage between starter motor connector F28 terminal S and battery positive terminal using a digital tester.

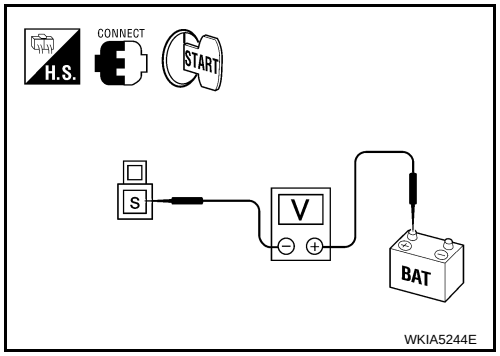

Ignition switch in START **: Less than 1V**

OK or NG

OK >> Magnetic switch circuit is OK. Further inspection is necessary. Refer to "WORK FLOW".

NG >> Check harness between the battery and the starter motor “S” terminal for poor continuity.

MINIMUM SPECIFICATION OF CRANKING VOLTAGE REFERENCING COOLANT TEMPERATURE

Engine coolant temperature	Voltage V
–30°C to –20°C (–22°F to –4°F)	8.4
–19°C to –10°C (–2°F to 14°F)	8.9
–9°C to 0°C (16°F to 32°F)	9.3
More than 1°C (More than 34°F)	9.7

Removal and Installation

INFOID:0000000001721048

Removal

1. Disconnect the negative battery terminal.

2. Remove the starter insulator.

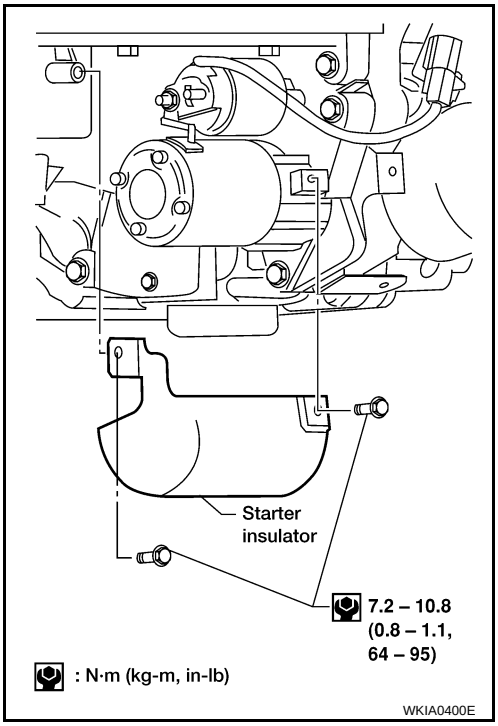

3. Remove the harness bracket and harness protector from the starter engine room harness.

4. Disconnect the starter harness connectors.

5. Remove the two starter bolts, using power tools.

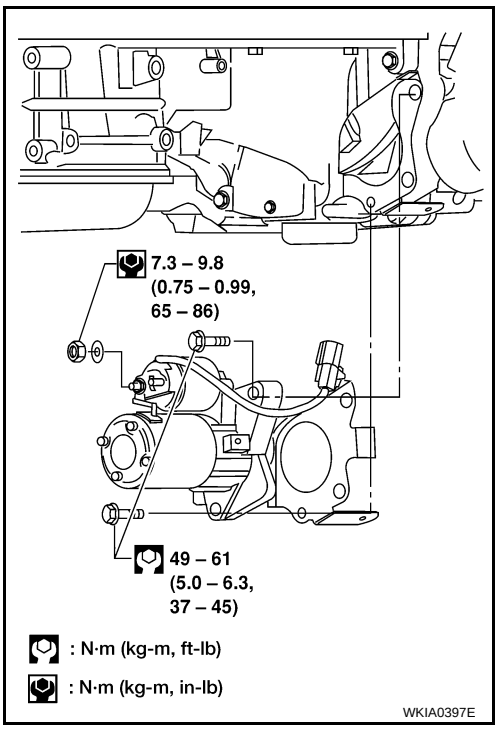

6. Remove the starter.

Installation
Installation is in the reverse order of removal.

CHARGING SYSTEM

System Description

INFOID:0000000001721049

The generator provides DC voltage to operate the vehicle's electrical system and to keep the battery charged. The voltage output is controlled by the IC regulator.
Power is supplied at all times to generator terminal S through:
- 10A fuse (No. 26, located in the fuse and fusible link box).

Terminal B supplies power to charge the battery and operate the vehicle's electrical system. Output voltage is controlled by the IC regulator at terminal S detecting the input voltage. The charging circuit is protected by the 120A fusible link (letter **a**, located in the fusible link box).
Ground is supplied:
- to generator terminal E
- through body ground E116.

With the ignition switch in the ON or START position, power is supplied:
- through 10A fuse [No. 14, located in the fuse block (J/B)]
- to combination meter terminal 23 for the charge warning lamp.

Ground is supplied to terminal 17 of the combination meter through terminal L of the generator. With power and ground supplied, the charge warning lamp will illuminate. When the generator is providing sufficient voltage with the engine running, the ground is opened and the charge warning lamp will go off.
If the charge warning lamp illuminates with the engine running, a fault is indicated.

Wiring Diagram - CHARGE -

INFOID:0000000001721050

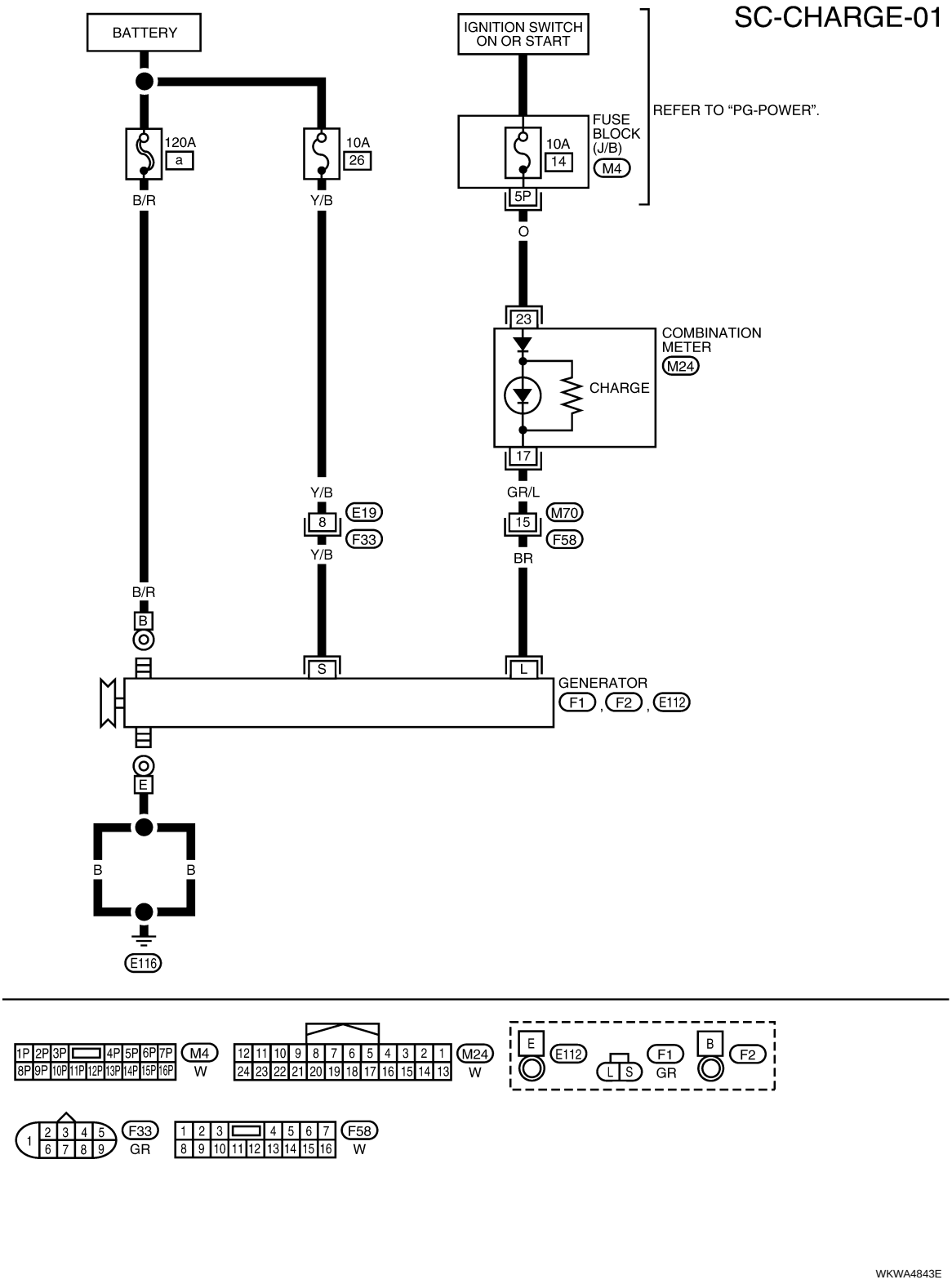

Trouble Diagnosis with Battery/Starting/Charging System Tester

INFOID:0000000001721051

NOTE:
To ensure a complete and thorough diagnosis, the battery, starter and generator test segments must be done as a set from start to finish.

1. Turn off all loads on the vehicle electrical system.
2. Perform battery and starting system test with Battery/Starting/Charging system tester.
3. Press “ENTER” to begin the charging system test.
4. Start engine.

PRESS ENTER FOR
CHARGING TEST

SEL417X

5. Press “ENTER” until “LOADS OFF REV ENGINE 5 SEC” is displayed.
6. Raise and hold the engine speed at 1,500 to 2,000 rpm for about 5 seconds, then return the engine to idle.
   Once the increase in engine rpm is detected, press “ENTER” to continue.
   NOTE:
   - If after 30 seconds an increase in engine idle speed is not detected, “RPM NOT DETECTED” will display.
   - Some engines may have a higher idle initially after starting, particularly when the engine is cold. The tester may detect this without any other action being taken. If this occurs, continue on with the testing process. The final results will not be affected.

LOADS OFF
REV ENGINE 5 SEC

SEL418X

7. The tester now checks the engine at idle and performs the DIODE/RIPPLE check.
8. When complete, the tester will prompt you to turn on the following electrical loads.
   - Heater fan set to highest speed. Do not run the A/C or windshield defroster.
   - Headlamp high beam
   - Rear window defogger
   NOTE:
   Do not run the windshield wipers or any other cyclical loads.

*** TESTING ***
ENGINE AT IDLE

*** TESTING ***
DIODE/RIPPLE

SEL419X

9. Press “ENTER” to continue.

TURN LOADS ON
ENTER TO CONT...

SEL420X

10. Raise and hold the engine speed at 1,500 to 2,000 rpm for about 5 seconds, then return the engine to idle. Once the increase in engine rpm is detected, press “ENTER” to continue.
    NOTE:
    If after 30 seconds an increase in engine idle speed is not detected, “RPM NOT DETECTED” will be displayed. Press “ENTER” to restart the test.

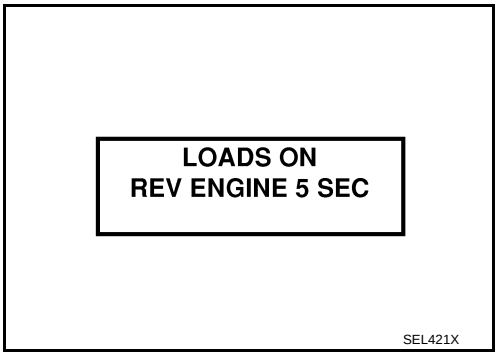

11. Diagnostic result is displayed on the tester. Refer to "DIAGNOSTIC RESULT ITEM CHART".

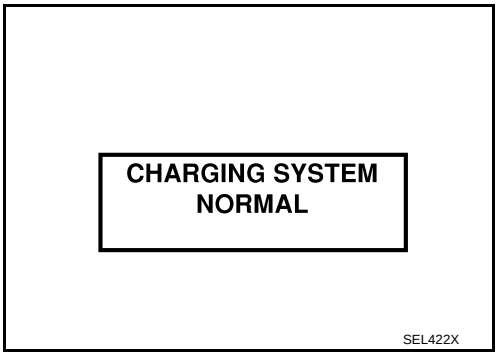

12. Press “ENTER” then test output code is displayed. Record the test output code on the repair order.
13. Toggle back to the “DIAGNOSTIC SCREEN” for test results.

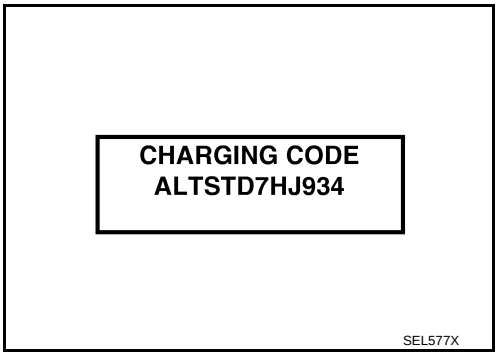

DIAGNOSTIC RESULT ITEM CHART

Diagnostic item	Service procedure
CHARGING SYSTEM NORMAL	Charging system is normal and will also show DIODE RIPPLE test result.
NO CHARGING VOLTAGE	Go to "WORK FLOW".
LOW CHARGING VOLTAGE	
HIGH CHARGING VOLTAGE	
DIODE RIPPLE NORMAL	Diode ripple is OK and will also show CHARGING VOLTAGE test result.
EXCESS RIPPLE DETECTED	Replace the generator. Perform “DIODE RIPPLE” test again using Battery/Starting/Charging system tester to confirm repair.
DIODE RIPPLE NOT DETECTED	Go to "WORK FLOW".

WORK FLOW

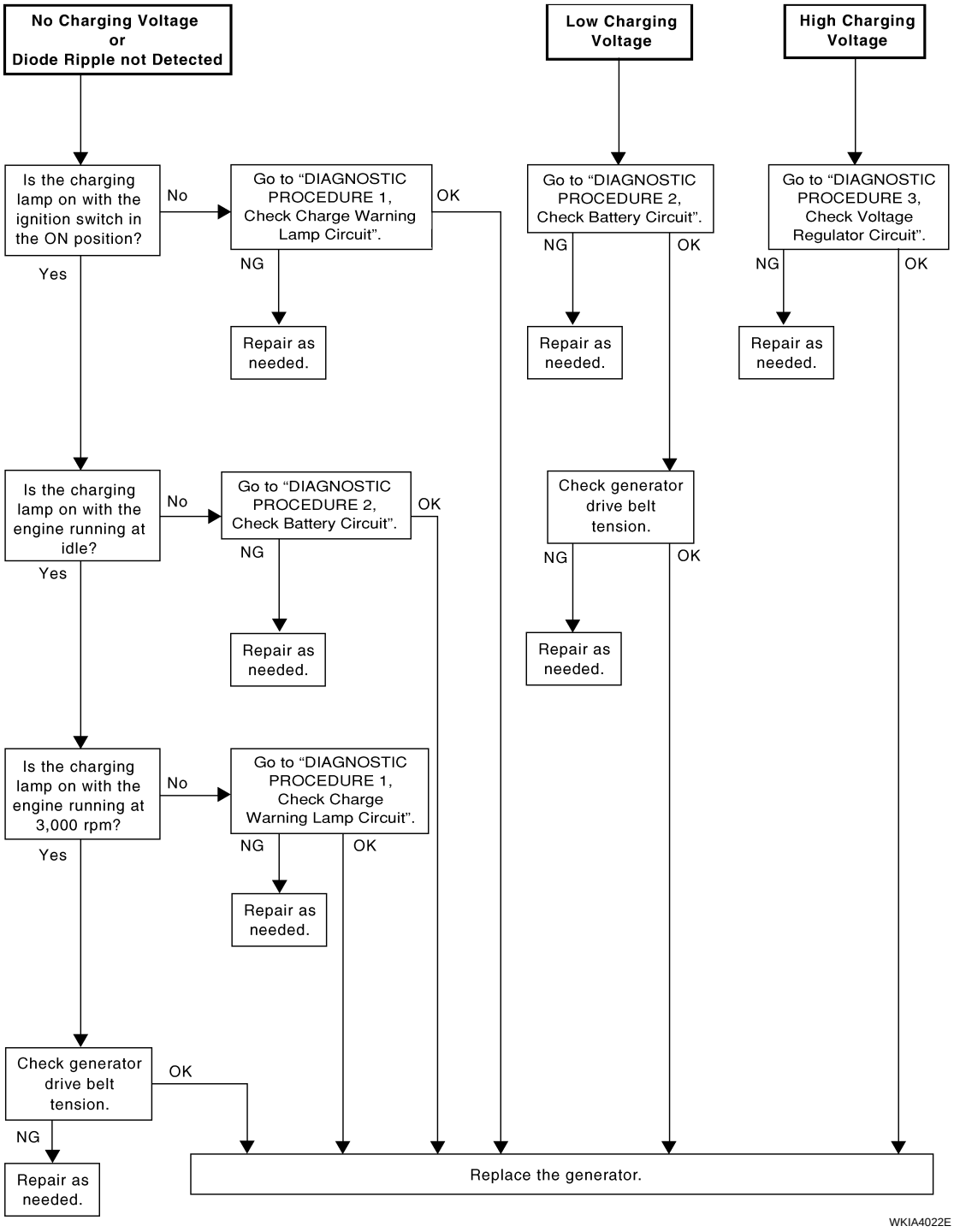

DIAGNOSTIC PROCEDURE 1

Check Charge Warning Lamp Circuit

1. CHECK CHARGE WARNING LAMP CIRCUIT CONNECTION

Check to see if "L" terminal is clean and tight.

OK or NG

OK >> GO TO 2.
NG >> Repair "L" terminal connection. Confirm repair by performing complete Battery/Starting/Charging system test.

2. CHECK CHARGE WARNING LAMP CIRCUIT

1. Disconnect F1 connector from generator.
2. Apply ground to connector F1 terminal L with the ignition switch in the ON position.

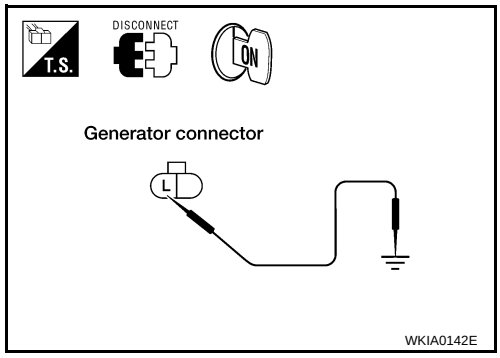

CHARGE lamp should light up.

OK or NG

OK >> GO TO "WORK FLOW".
NG >> Check the following.
- 10A fuse [No. 14, located in fuse block (J/B)]
- CHARGE lamp
- Harness for open or short between combination meter and fuse
- Harness for open or short between combination meter and generator

DIAGNOSTIC PROCEDURE 2

Check Battery Circuit

1. CHECK BATTERY CIRCUIT CONNECTION

Check to see if “B” terminal is clean and tight.

OK or NG

OK >> GO TO 2. Confirm repair by performing complete Battery/Starting/Charging system test.
NG >> Repair terminal “B” connection.

2. CHECK BATTERY CIRCUIT

Check voltage between generator connector F2 terminal B and ground using a digital circuit tester.

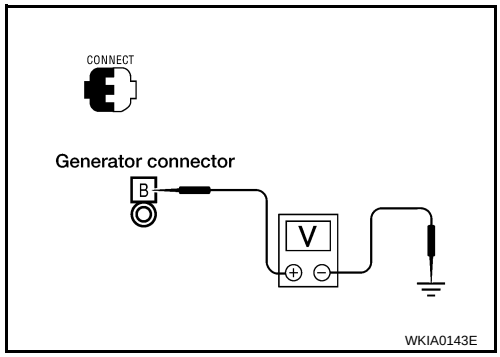

Battery voltage should exist.

OK or NG

OK >> GO TO 3.
NG >> Check the following.
- 120A fusible link (letter **a**, located in fusible link box)
- Harness for open or short between generator and fusible link

3. CHECK VOLTAGE DROP ON BATTERY CIRCUIT

Check voltage between generator connector F2 terminal B and battery positive terminal using a digital tester.

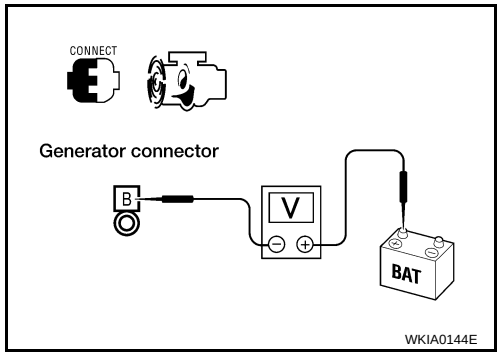

With engine running at idle and warm : Less than 0.2V

OK or NG

OK >> Replace the generator. Confirm repair by performing complete Battery/Starting/Charging system test.
NG >> Check harness between the battery and the generator for poor continuity.

DIAGNOSTIC PROCEDURE 3

Check Voltage Regulator Circuit

1. CHECK VOLTAGE REGULATOR CIRCUIT CONNECTION

Check to see if terminal “S” is clean and tight.

OK or NG

OK >> GO TO 2.
NG >> Repair terminal “S” connection. Confirm repair by performing complete Battery/Starting/Charging system test.

2. CHECK VOLTAGE REGULATOR CIRCUIT

Check voltage between generator connector F1 terminal S and ground using a digital circuit tester.

Battery voltage should exist.

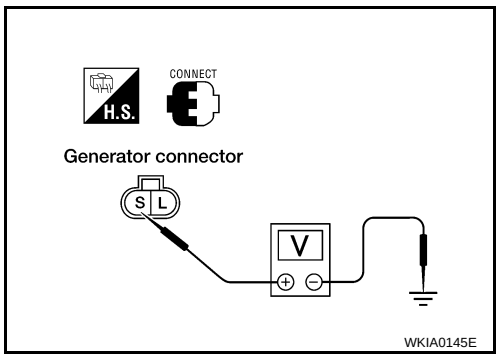

OK or NG

OK >> GO TO 3.
NG >> Check the following.
- 10A fuse (No. 26, located in fuse and fusible link box)
- Harness for open or short between generator and fuse

3. CHECK VOLTAGE DROP ON VOLTAGE REGULATOR CIRCUIT

Check voltage between generator connector F1 terminal S and battery positive terminal using a digital tester.

With engine running at idle and warm : Less than 0.2V

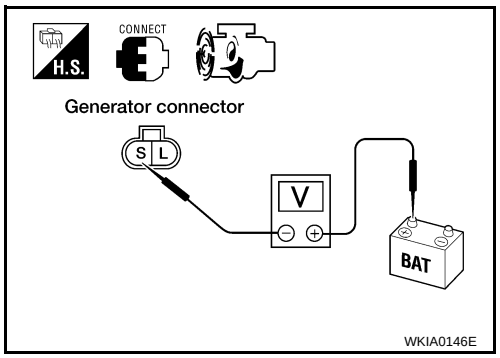

OK or NG

OK >> Replace the generator. Confirm repair by performing complete Battery/Starting/Charging system test.
NG >> Check harness between the battery and the generator for poor continuity.

MALFUNCTION INDICATOR

The IC regulator warning function activates to illuminate “CHARGE” warning lamp, if any of the following symptoms occur while generator is operating:
- Excessive voltage is produced.
- No voltage is produced.

Removal and Installation

INFOID:0000000001721052

REMOVAL

1. Disconnect the negative battery terminal.
2. Remove radiator. Refer CO-13, "Removal and Installation".
3. Remove the drive belt. Refer to EM-13.
4. Remove idler pulley.
5. Remove the generator adjustable top mount, using power tools.
6. Remove the generator lower bolt and nut, using power tools.
7. Disconnect the generator harness connectors.
8. Remove the generator upper bolt, using power tools.
9. Remove the generator.

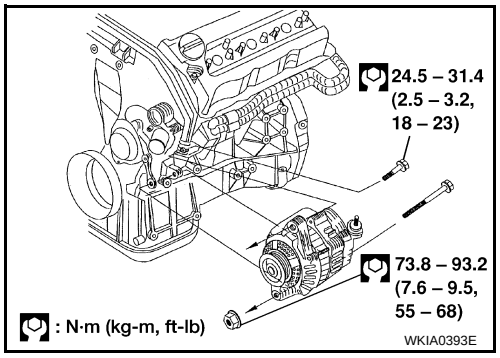

INSTALLATION

Installation is in the reverse order of removal.

- After installation adjust drive belt refer to EM-13, "Checking Drive Belts".

SERVICE DATA AND SPECIFICATIONS (SDS)

Battery

INFOID:0000000001721053

Type	80D26L(heavy duty)
Capacity (5 HR) minimum V-AH	12-55
Cold cranking current A (For reference value)	550 @ -18°C (0°F)

Starter

INFOID:0000000001721054

Manufacturer		Mitsubishi M000T20771ZC
Type		Reduction gear type
System voltage		12V
No-load	Terminal voltage	11V
	Current	90A Max.
	Revolution	2,800 rpm Min.
Minimum diameter of commutator		28.8 mm
Minimum length of brush		7.0 mm
Brush spring tension		18.3-24.8 N (1.87-2.53 kg, 4.11-5.58 lb)
Clearance between pinion front edge and pinion stopper		0.5-2.0 mm

Generator

INFOID:0000000001721055

Type	TG12C014
	Valeo
Nominal rating	12V-110A
Ground polarity	Negative
Minimum revolution under no-load (When 13.5 volts is applied)	1100 rpm
Hot output current (When 13.5 volts is applied)	More than 27A/1,500 rpm More than 90A/2,500 rpm More than 112A/5,000 rpm
Regulated output voltage	14.2 - 14.6V @ 25°C
Minimum length of brush	4.4 mm (0.173 in)
Brush spring pressure	1.8 - 3.1 N (0.184 - 0.32 kg, 0.40 - 0.70 lb)
Slip ring minimum outer diameter	12.0 mm (.47 in)
Rotor (Field coil) resistance	2.3 ohms